Zenamic (Metal Oxide Varistor)

METAL OXIDE VARISTOR

ZENAMIC

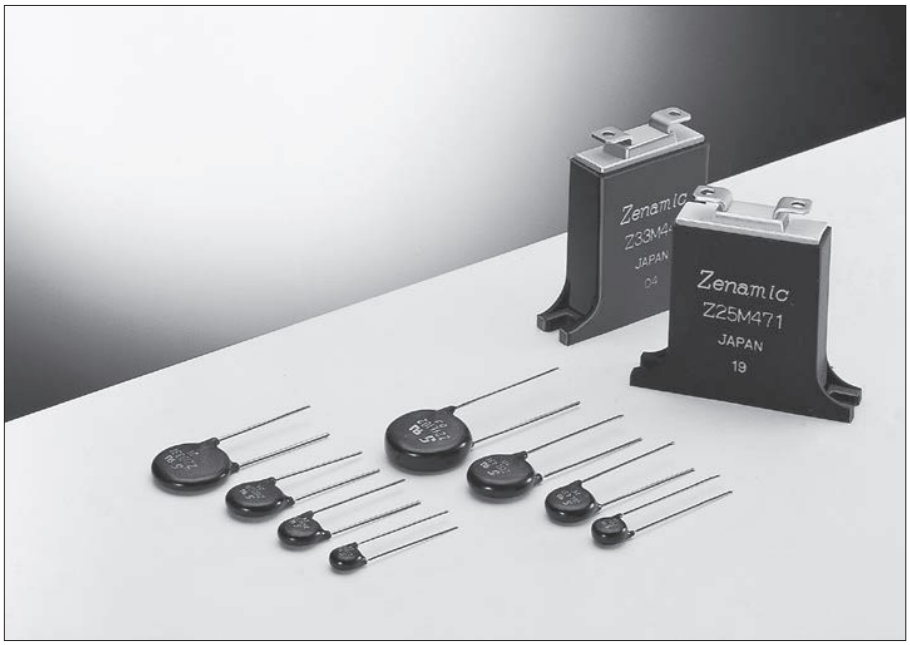

Zenamic is the registered trademark for our oxidized metal varistors. Zenamic features large surge current handling ability and transient overvoltage handling capability. Zenamic is produced by sintering a ZnO based mineral mix at temperatures of 1200 to 1400°C.

Applications

- Semiconductor protection: Diodes, transistors, thyristors, IC etc.
- Home electronics protection: TVs, air conditioners, refrigerators, microwave ovens etc.
- Office automation device protection: PPC copy machines, fax machines, PCs etc.
- Industrial device protection: Robots, boilers, machine tooling etc.
- Inrush surge protection: Electromagnetic clutch / break devices, relay control devices, short circuit breakers etc.
- Others: Automotive electrification, vending machines, communication / broadcasting devices etc.

V-I characteristics

ZENAMIC has the forward-reverse symmetrical characteristics as shown in figure 1. The voltage-current curves show the varistor characteristics for the range of 1 μA to 104 A, and show the resistance characteristics for the values below 1 μA and above 104 A in figure 2.
The voltage across terminals when a test current (It: 1 mA) is applied to ZENAMIC is the standard varistor voltage (Vz), and the voltage across terminals when a standard surge (Ip) is applied represents the maximum suppression voltage (Vc).

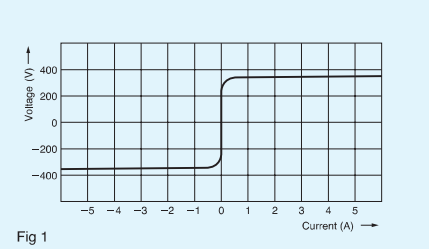

Fig 1

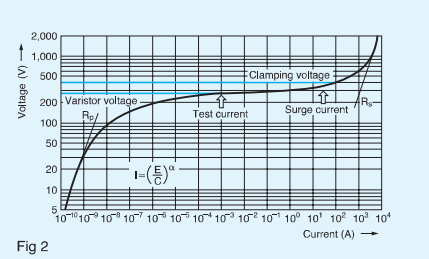

Fig 2

Temperature characteristics

For low current values ZENAMIC features outstanding temperature characteristics. The shunt resistance Rp of the metal oxide varistor has temperature characteristics which are determined by the following equation.

$$RP = Ae^{EG/2kT} \quad (2)$$

T: Absolute temperature
k: Boltzmann constant
A, Eg: constants

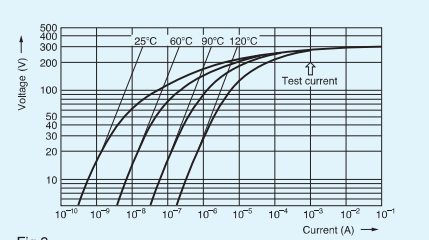

Fig 3

Temperature dependence characteristics for low current values.

The surge waveform

The surge waveform varies according to the sources. An EXP waveform is used for surge testing of ZENAMIC, while a AC half-wave is used for the energy absorption test. The EXP waveform reaches its peak voltage (current) at [ta] as shown in figure 5, and then decreases as time passes and reaches half of the peak voltage (current) at [tb]. This type of the EXP waveform is shown as a [ta/tb] voltage (current) waveform. For surge testing of ZENAMIC, a 8/20μ sec current waveform is used.

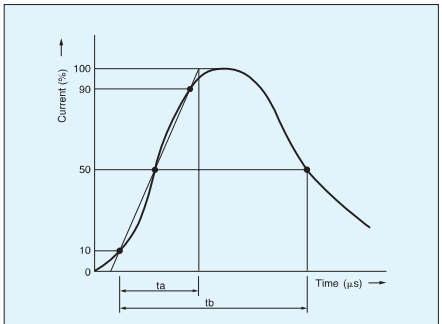

Fig 5

Part Number

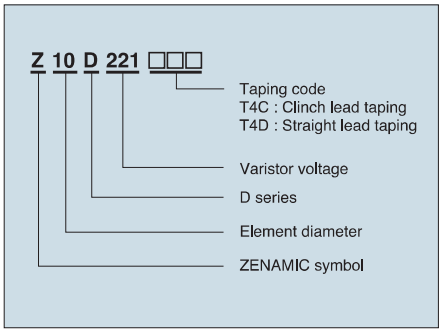

Application notes (general)

A surge in excess of the specified maximum peak current may cause a short circuit or mechanical damage. The following measures are recommended.

- If ZENAMIC is used in line to ground, the ground fault circuit interrupter should be applied in location A or, alternatively, a thermally coupled fuse should be applied in location C.
- ZENAMIC should not be used near heat generating devices and not be subjected to direct sunlight.
- ZENAMIC should not be used near flammable materials.

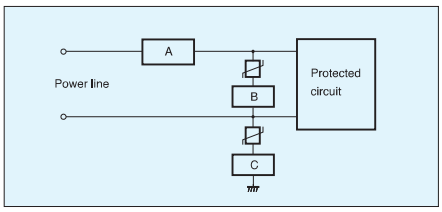

1) The location of the over current protector (circuit breaker or current fuse) should be in the power line to the circuit (location A) or in series with ZENAMIC (location B).
2) It is recommended that a fuse similar to the ones listed in the table below be put in location A or B.
3) If ZENAMIC is used in line to ground, the ground fault circuit interrupter should be applied in location A or, alternatively, a thermally coupled fuse should be applied in location C.

Part Number	Z7D□□□	Z10D□□□
Rating of fuse	5A max.	7A max.

Part Number	Z15D□□□	Z21D□□□
Rating of fuse	10A max.	15A max.

Please also consult the related safety standards.

Example circuits

Example circuits with power lines and surge absorption unit locations.

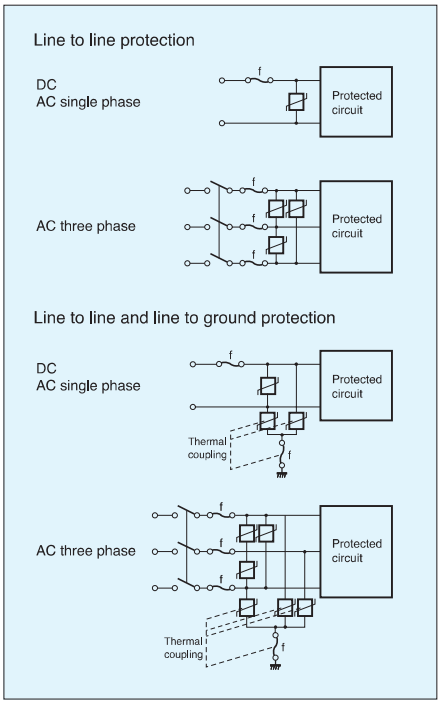

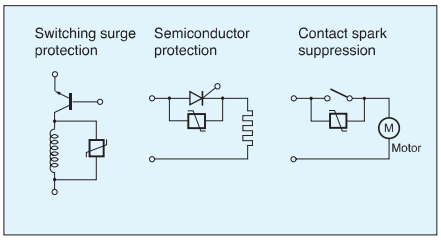

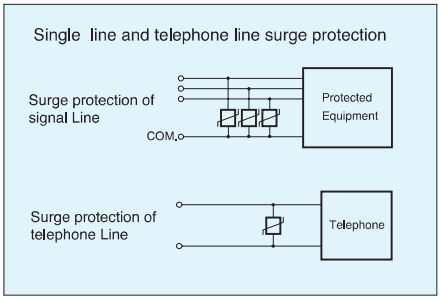

Z7D Series

Specifications

Part No.	Varistor voltage	Maximum allowable voltage		Clamping voltage (max.)	Rated power	Maximum energy		Maximum peak current (8/20μs)	Capacitance (TYP) 1kHz
						(10/1000μs)	(2ms)	2 times	
	V_{1mA}(V)	AC_{rms} (V)	DC(V)	V(V)	(W)	(J)	(J)	(A)	(pF)
Z7D180	18(16-20)	11	14	36 at 2.5A	0.02	1.1	0.9	250	3800
Z7D220	22(20-24)	14	18	43		1.3	1.1		3600
Z7D270	27(24-30)	17	22	53		1.6	1.3		3400
Z7D330	33(30-36)	20	26	65		2.0	1.6		2900
Z7D390	39(35-43)	25	31	77		2.4	1.9		1600
Z7D470	47(42-52)	30	38	93		2.8	2.3		1550
Z7D560	56(50-62)	35	45	110		3.4	2.7		1500
Z7D680	68(61-75)	40	56	135		4.1	3.3		1200
Z7D820[1]	82(74-90)	50	65	135 at 10A	0.25	7	5	1250	810
Z7D101[1]	100(90-110)	60	85	165		8.5	6		700
Z7D121[1]	120(108-132)	75	100	200		10	7		590
Z7D151[1]	150(135-165)	95	125	250		13	9		500
Z7D201[1]	200(185-225)	130	170	340		17.5	12.5		200
Z7D221[1]	220(198-242)	140	180	360		19	13.5		190
Z7D241[1]	240(216-264)	150	200	395		21	15		170
Z7D271[1]	270(247-303)	175	225	455		24	17		150
Z7D331[1]	330(297-363)	210	270	545		28	20		130
Z7D361[1]	360(324-396)	230	300	595		32	23		130
Z7D391[1]	390(351-429)	250	320	650		35	25		130
Z7D431[1]	430(387-473)	275	350	710		40	27.5		120
Z7D471[1]	470(423-517)	300	385	775		42	30		100[2]
Z7D511[1]	510(459-561)	320	410	845		45	32		90[2]

Operating temperature range:−40 to 85°C
Storage temperature range:−40 to 125°C
[1] UL 1449 approved model
[2] Measured at 1MHz

Z10D Series

Specifications

Part No.	Varistor voltage	Maximum allowable voltage		Clamping voltage (max.)	Rated power	Maximum energy		Maximum peak current (8/20μs)	Capacitance (TYP) 1kHz
						(10/1000μs)	(2ms)	2 times	
	V_{1mA}(V)	AC_{rms}(V)	DC(V)	V(V)	(W)	(J)	(J)	(A)	(pF)
Z10D180	18(16-20)	11	14	36 at 5A	0.05	2.6	2.2	500	16000
Z10D220	22(20-24)	14	18	43		3.2	2.6		11000
Z10D270	27(24-30)	17	22	53		3.9	3.2		8000
Z10D330	33(30-36)	20	26	65		4.8	4.0		6300
Z10D390	39(35-43)	25	31	77		5.6	4.7		5200
Z10D470	47(42-52)	30	38	93		6.8	5.6		4600
Z10D560	56(50-62)	35	45	110		8.1	6.7		3750
Z10D680	68(61-75)	40	56	135		9.8	8.2		2800
Z10D820[1]	82(74-90)	50	65	135 at 25A	0.4	14	10	2500	2000
Z10D101[1]	100(90-110)	60	85	165		17	12		1700
Z10D121[1]	120(108-132)	75	100	200		20	14.5		1400
Z10D151[1]	150(135-165)	95	125	250		25	18		1100
Z10D201[1]	200(185-225)	130	170	340		35	25		430
Z10D221[1]	220(198-242)	140	180	360		39	27.5		410
Z10D241[1]	240(216-264)	150	200	395		42	30		380
Z10D271[1]	270(247-303)	175	225	455		49	35		350
Z10D331[1]	330(297-363)	210	270	545		58	42		300
Z10D361[1]	360(324-396)	230	300	595		65	45		300
Z10D391[1]	390(351-429)	250	320	650		70	50		300
Z10D431[1]	430(387-473)	275	350	710		80	55		270
Z10D471[1]	470(423-517)	300	385	775		85	60		230
Z10D511[1]	510(459-561)	320	410	845		92	67		210
Z10D561[1]	560(504-616)	350	450	930		92	67		200
Z10D681[1]	680(612-748)	420	560	1120		92	67		170
Z10D751[1]	750(675-825)	460	615	1240		100	70		160
Z10D821[1]	820(738-902)	510	670	1355		110	80		140
Z10D911[1]	910(819-1001)	550	745	1500		130	90		120
Z10D102[1]	1000(900-1100)	625	825	1650		140	100		110

Operating temperature range:−40 to 85°C
Storage temperature range:−40 to 125°C
[1] UL 1449 approved model

Z15D Series

Specifications

Part No.	Varistor voltage	Maximum allowable voltage		Clamping voltage (max.)	Rated power	Maximum energy		Maximum peak current (8/20μs)	Capacitance (TYP) 1kHz
						(10/1000μs)	(2ms)	2 times	
	V_{1mA}(V)	AC_{rms}(V)	DC(V)	V(V)	(W)	(J)	(J)	(A)	(pF)
Z15D180	18(16-20)	11	14	36 at 10A	0.1	5.2	4.3	1000	25000
Z15D220	22(20-24)	14	18	43		6.3	5.3		20000
Z15D270	27(24-30)	17	22	53		7.8	6.5		16000
Z15D330	33(30-36)	20	26	65		9.5	7.9		12200
Z15D390	39(35-43)	25	31	77		11	9.4		7000
Z15D470	47(42-52)	30	38	93		14	11		6750
Z15D560	56(50-62)	35	45	110		16	13		6500
Z15D680	68(61-75)	40	56	135		20	16		5500
Z15D820[1]	82(74-90)	50	65	135 at 50A	0.6	28	20	4500	3700
Z15D101[1]	100(90-110)	60	85	165		35	25		3200
Z15D121[1]	120(108-132)	75	100	200		42	30		2700
Z15D151[1]	150(135-165)	95	125	250		53	37.5		2200
Z15D201[1]	200(185-225)	130	170	340		70	50		770
Z15D221[1]	220(198-242)	140	180	360		78	55		740
Z15D241[1]	240(216-264)	150	200	395		84	60		700
Z15D271[1]	270(247-303)	175	225	455		99	70		640
Z15D331[1]	330(297-363)	210	270	545		115	80		580
Z15D361[1]	360(324-396)	230	300	595		130	90		540
Z15D391[1]	390(351-429)	250	320	650		140	100		500
Z15D431[1]	430(387-473)	275	350	710		155	110		450
Z15D471[1]	470(423-517)	300	385	775		175	125		400
Z15D511[1]	510(459-561)	320	410	845		190	136		350
Z15D561[1]	560(504-616)	350	450	930		190	136		340
Z15D681[1]	680(612-748)	420	560	1120		190	136		320
Z15D751[1]	750(675-825)	460	615	1240		210	150		310
Z15D821[1]	820(738-902)	510	670	1355		235	165		280
Z15D911[1]	910(819-1001)	550	745	1500		255	180		250
Z15D102[1]	1000(900-1100)	625	825	1650		280	200		230

Operating temperature range:−40 to 85°C
Storage temperature range:−40 to 125°C

[1] UL 1449 approved model

Z21D Series

Specifications

Part No.	Varistor voltage	Maximum allowable voltage		Clamping voltage (max.)	Rated power	Maximum energy		Maximum peak current (8/20μs)	Capacitance (TYP) 1kHz
						(10/1000μs)	(2ms)	2 times	
	V_{1mA}(V)	AC_{rms}(V)	DC(V)	V(V)	(W)	(J)	(J)	(A)	(pF)
Z21D180	18(16-20)	11	14	36 at 20A	0.2	13	12	2000	40000
Z21D220	22(20-24)	14	18	43		16	14		30000
Z21D270	27(24-30)	17	22	53		19	17		24500
Z21D330	33(30-36)	20	26	65		24	21		20000
Z21D390	39(35-43)	25	31	77		28	25		13800
Z21D470	47(42-52)	30	38	93		34	30		13500
Z21D560	56(50-62)	35	45	110		41	36		12200
Z21D680	68(61-75)	40	56	135		49	44		11500
Z21D820[1]	82(74-90)	50	65	135 at 100A	1.0	56	40	6500	7500
Z21D101[1]	100(90-110)	60	85	165		70	50		6500
Z21D121[1]	120(108-132)	75	100	200		85	60		5500
Z21D151[1]	150(135-165)	95	125	250		106	75		4500
Z21D201[1]	200(185-225)	130	170	340		140	100		1700
Z21D221[1]	220(198-242)	140	180	360		155	110		1600
Z21D241[1]	240(216-264)	150	200	395		168	120		1500
Z21D271[1]	270(247-303)	175	225	455		190	135		1300
Z21D331[1]	330(297-363)	210	270	545		228	160		1100
Z21D361[1]	360(324-396)	230	300	595		255	180		1100
Z21D391[1]	390(351-429)	250	320	650		275	195		1100
Z21D431[1]	430(387-473)	275	350	710		303	215		1000
Z21D471[1]	470(423-517)	300	385	775		350	250		900
Z21D511[1]	510(459-561)	320	410	845		382	273		800
Z21D561[1]	560(504-616)	350	450	930		382	273		750
Z21D681[1]	680(612-748)	420	560	1120		382	273		650
Z21D751[1]	750(675-825)	460	615	1240		420	300		600
Z21D821[1]	820(738-902)	510	670	1355		460	325		530
Z21D911[1]	910(819-1001)	550	745	1500		510	360		500
Z21D102[1]	1000(900-1100)	625	825	1650		565	400		450

Operating temperature range:−40 to 85°C
Storage temperature range:−40 to 125°C

[1] UL 1449 approved model

Dimensions

Z7D

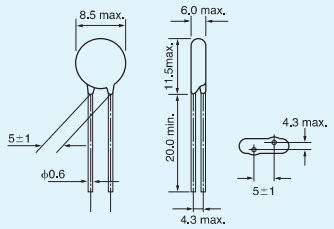

Z10D

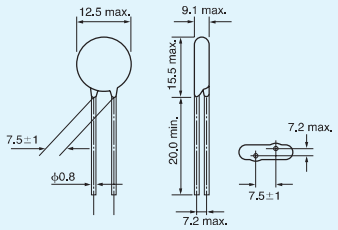

Z15D

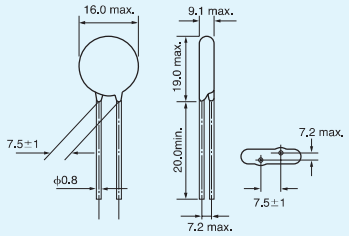

Z21D

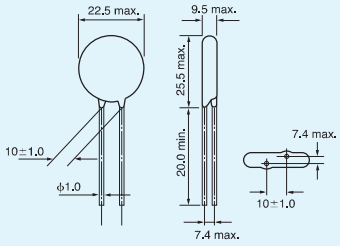

Crimped leads + taping
Z7D□□□ T4C

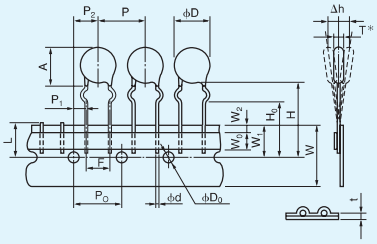

[1]Dimension "T" changes for each individual part specification.
Packing quantity: 1000 pcs/box

Symbol	Type I
P	12.7±1.0
P_0	12.7±0.3
P_1	3.85±0.70
P_2	6.35±1.30
ϕd	$0.60^{+0.06}_{-0.05}$
F	5.0±0.5
Δh	0±2
W	$18.0^{+1.0}_{-0.5}$
ϕD	Z7D: 8.5max

Symbol	Type I
W_0	5.0min
W_1	9.0±0.5
W_2	3max
H	Approx. 22
H_0	17.0±0.5
$ϕD_0$	ϕ4.0±0.2
t	0.6±0.3
L	11max

Straight leads + taping
Z7D □□□ T4D

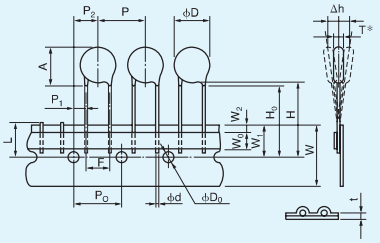

[1]Dimension "T" changes for each individual part specification.
Packing quantity: 1000 pcs/box

P	12.7±1.0
P_0	12.7±0.3
P_1	3.85±0.70
P_2	6.35±1.30
ϕd	$0.60^{+0.06}_{-0.05}$
F	5.0±0.5
Δh	0±2
W	$18.0^{+1.0}_{-0.5}$

W_0	5.0min
W_1	9.0±0.5
W_2	3max
H	Approx. 20
H_0	17.0±0.5
$ϕD_0$	ϕ4.0±0.2
t	0.6±0.3
L	11max
ϕD	Z7D: 8.5max

Unit (mm)